ECS-WHT-751S220SPP+ECS-WHT-201

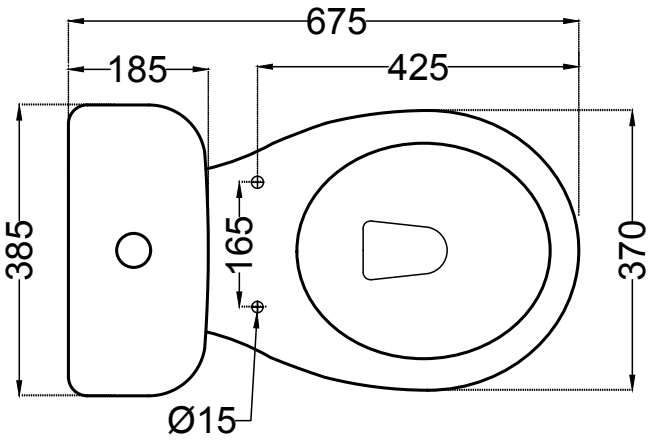

TOP VIEW

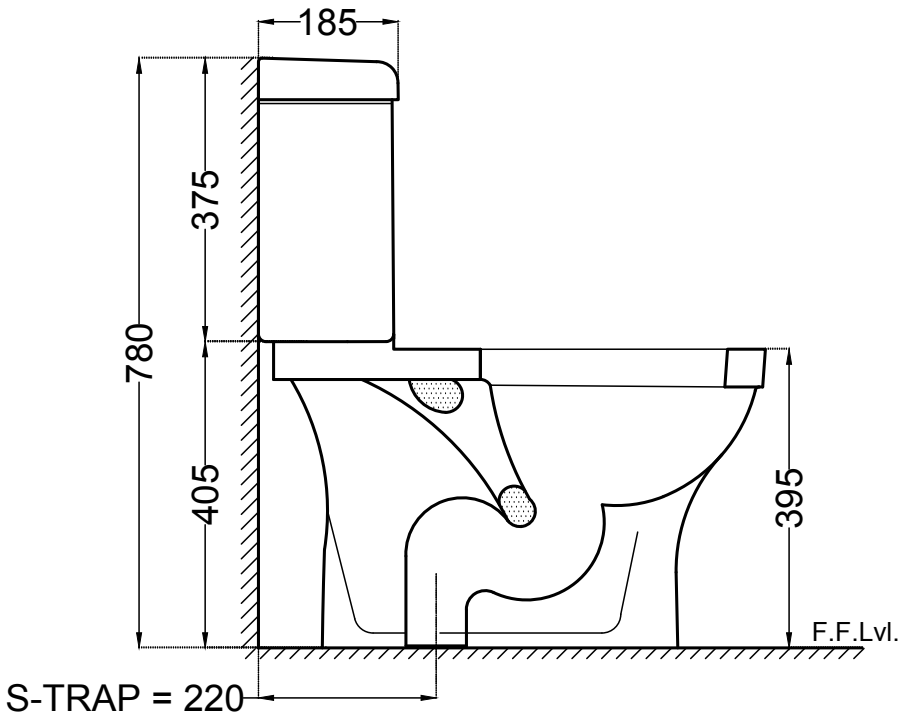

BACK VIEW

ALL DIMENSIONS ARE IN MM.
(TOLERANCE ± 5 MM)