ECS-WHT-751P180NPP+ECS-WHT-201

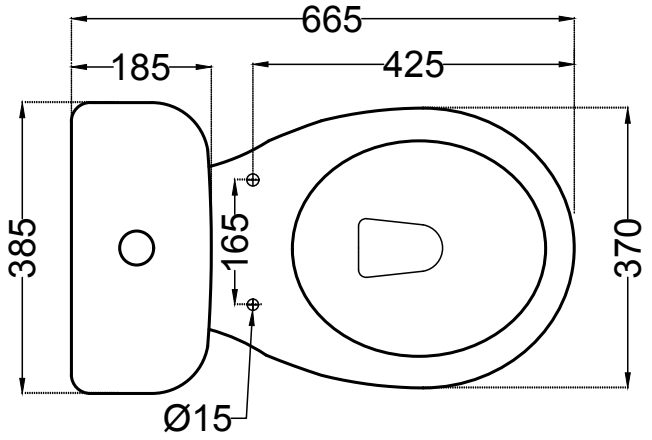

TOP VIEW

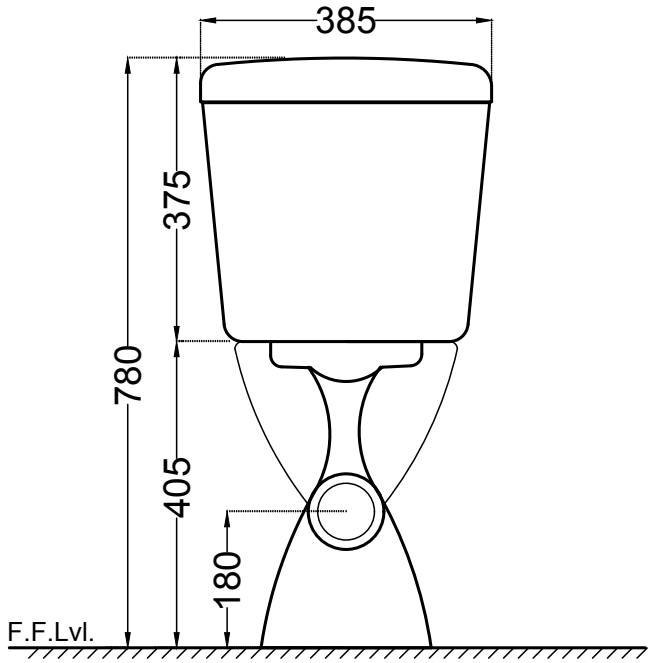

BACK VIEW

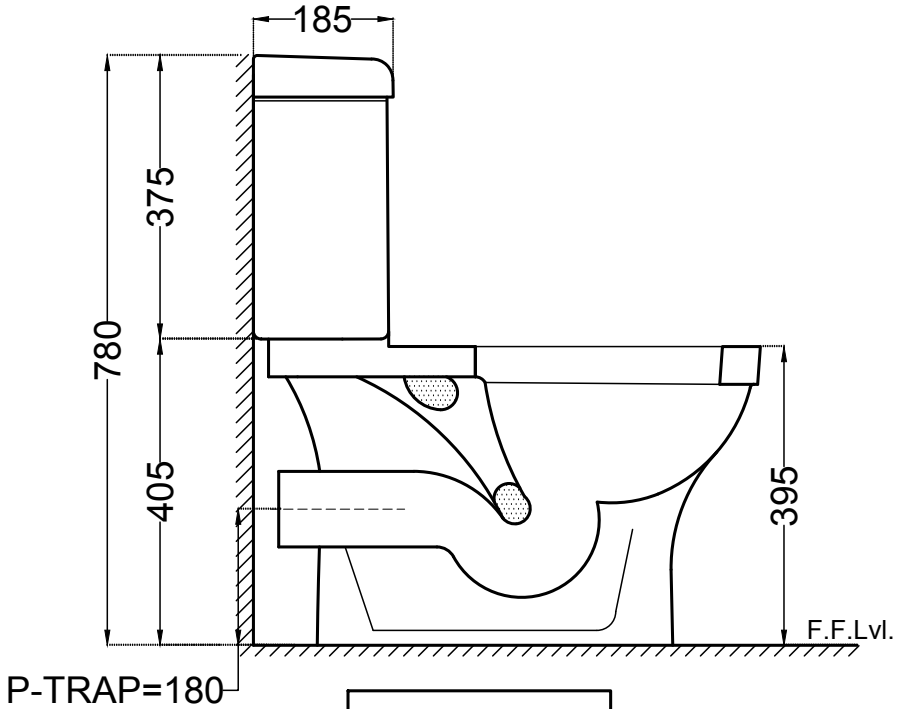

SIDE VIEW

ALL DIMENSIONS ARE IN MM.
(TOLERANCE ± 5 MM)