AIS-WHT-101801+AIS-WHT-101305

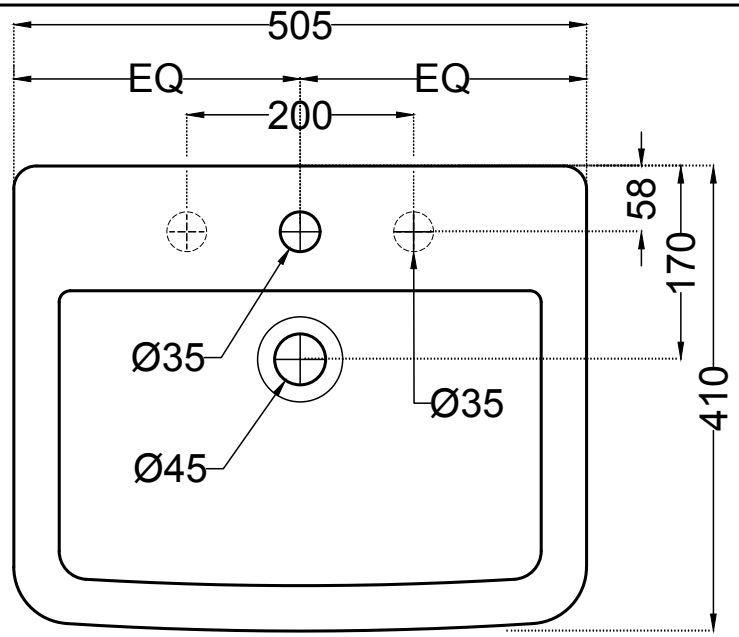

TOP VIEW

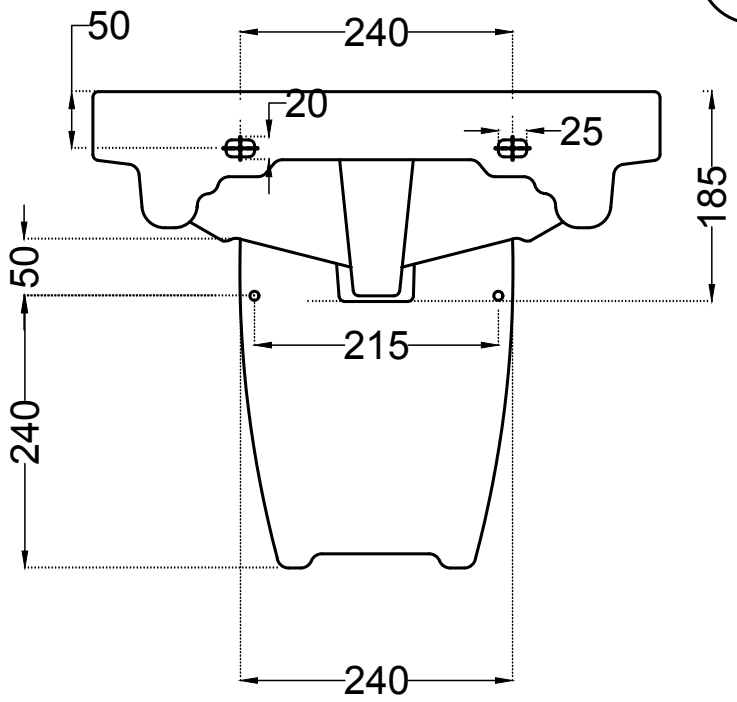

BACK VIEW

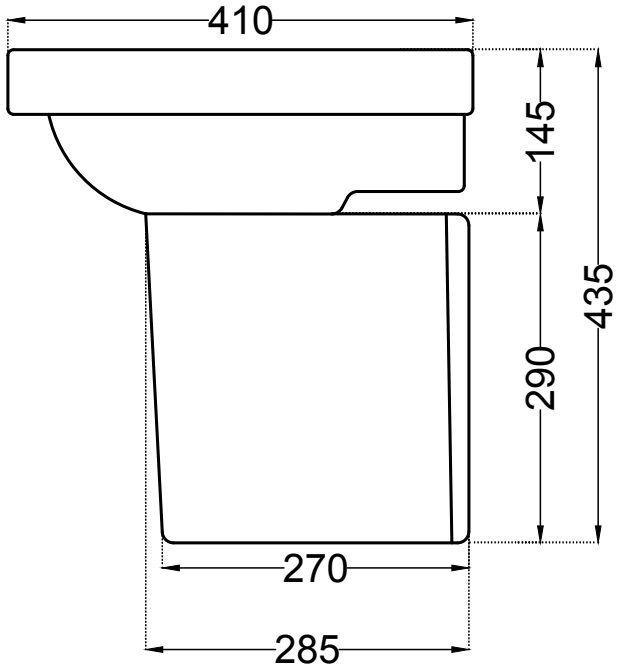

SIDE VIEW

ALL DIMENSIONS ARE IN MM.
(TOLERANCE ± 5 MM)