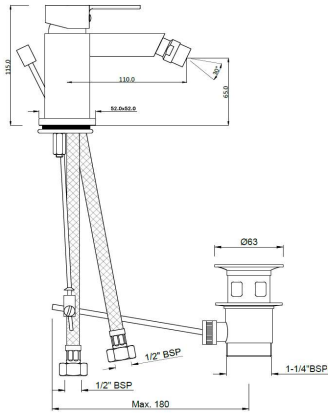

Product Code	KIO-CHR-111213B
Description	Single Lever 1-Hole Bidet Mixer with Popup Waste System with 375mm Long Braided Hoses
Connection Size	Braided hoses, 1/2" FIP (ACS Approved) Withstand pressure of 10 Bar
Flow Rate	8.00 LPM @ 3 bar
Flow regulator	By using flow regulators (Product should be ordered with suffix as GA-6.0 LPM, @ 4.0 Bar pressure) one can regulate the flow rate.
Recommended Water Pressure	0.5 Bar - 5 Bar
Material Composition Specification in Percentage	**Brass Ingots as per IS:1264-1997** Cu (58.0-63.0), Sn (0.0-1.0), Pb (0.5-2.5), Ni (0.0-1.0), Al (0.2-0.8), Mn (0.0-0.5), Total Impurity (0.0-2.0), Zn (Remainder) **Brass Rod as per IS:319-1989** Cu (56.0-59.0), Pb (2.0-3.5), Fe (0.0-0.35), Total Impurity (0.0-0.7), Zn (Remainder) **S.S Sheets as per AISI : 304** Ni (8.0-11.0), Ch (18.0-20.0), Mn (0.0-0.2), Ca (0.0-0.08), Ir (Remainder)
Cartridge Specification	Cartridge with Temperature Limiter Cartridge with Brass Spindle Life Cycle EN 817: 70,000 cycles (Standard) - 1.40 LAC Cycles as per EN 817* - 7.0 LAC Cycles (ON/OFF)*
Accessories incl.	Pop-up waste 1¼“
Water Tightness	12 bar (Pass)
Pressure Resistance	20 bar (Pass)
Finish	Plating: Nickel-8.0 micron Chromium-0.20 micron Salt Spray (300 hrs + Validated) Adhesion (Pass)
Aerator Size	M18X1mm
Available Colour Finishing	Chrome (CHR)
DISCLAIMER: Our every effort has been made to ensure factual accuracy, the information presented subject to changes due to requirements in different sites, markets and/ or countries. 10% variation in flow rate may be possible. Jaquar reserves the right to make the necessary amendments at any time without prior notice.	