ESSCO BY Jaquar GROUP

DELUX



Delux



DLX-CHR-516KN

Central Hole Basin Mixer

Price: 4550.00 INR

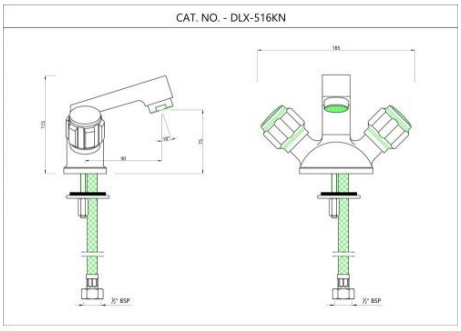



DLX-CHR-516AKN

Central Hole Basin Mixer

Price: 4150.00 INR

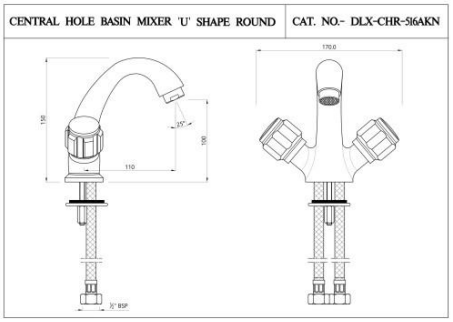



DLX-CHR-510KN

Swan Neck Tap

Price: 2850.00 INR

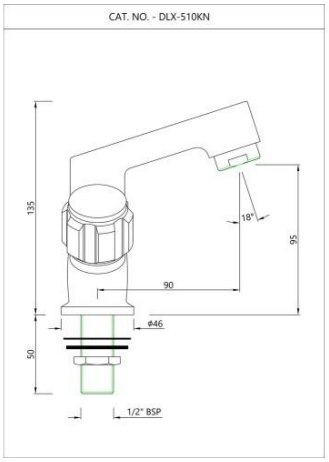

Delux



DLX-CHR-507KN

Pillar Cock

Price: 2025.00 INR

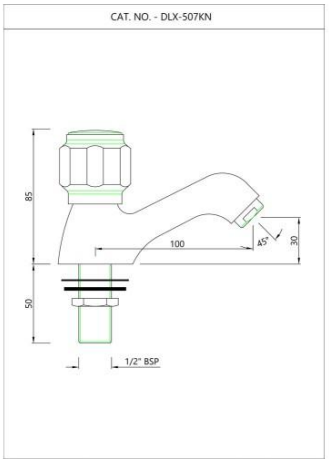



DLX-CHR-508KN

Pillar Cock

Price: 2050.00 INR

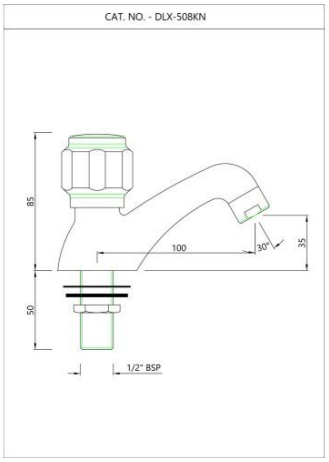



DLX-CHR-517KN

Wall Mixer with Telephone Shower Arrangement only

Price: 7500.00 INR

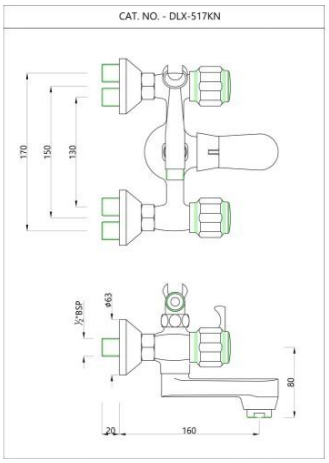

Delux



DLX-CHR-517BKN

Wall Mixer

Price: 7250.00 INR

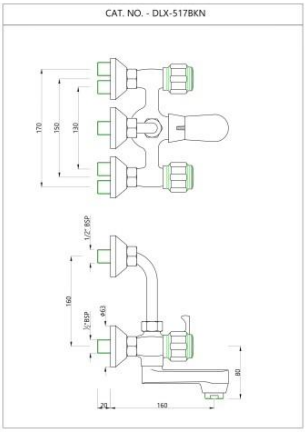



DLX-CHR-519KN

Wall Mixer 3-in-1 System

Price: 8050.00 INR

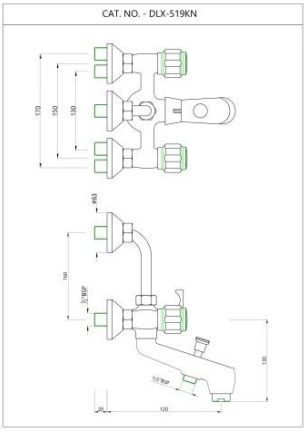



DLX-CHR-520KN

Wall Mixer Non-telephonic Shower System

Price: 4650.00 INR

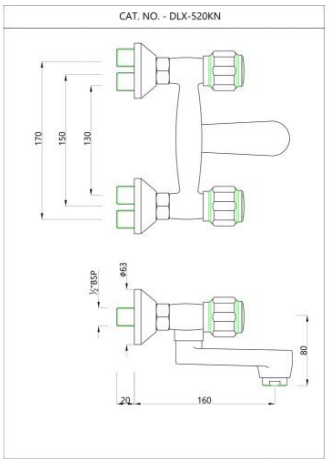

Delux



DLX-CHR-521S

Sink Mixer

Price: 4400.00 INR

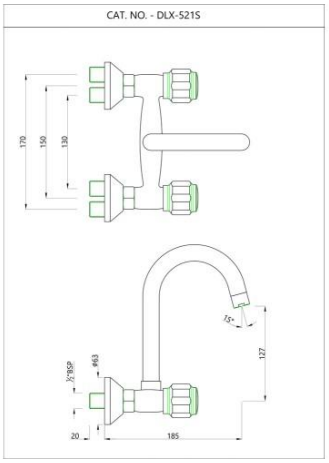



DLX-CHR-527S

Sink Mixer

Price: 3900.00 INR

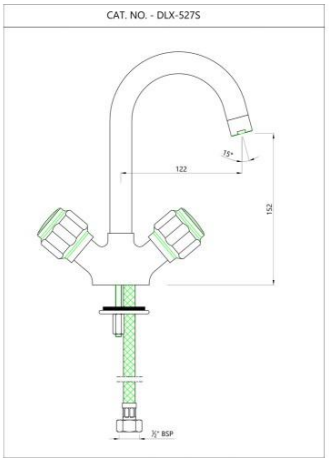



DLX-CHR-522S

Sink Cock

Price: 2125.00 INR

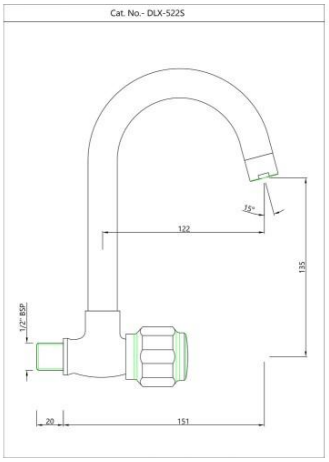

Delux



DLX-CHR-523S

Sink Cock

Price: 2725.00 INR

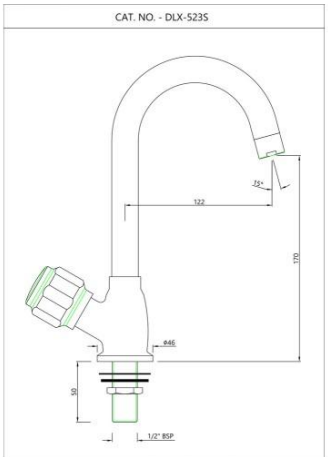



DLX-CHR-511KN

Bib Cock

Price: 1400.00 INR

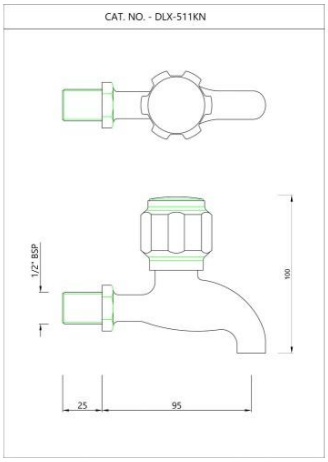



DLX-CHR-511AKN

Bib Cock

Price: 1500.00 INR

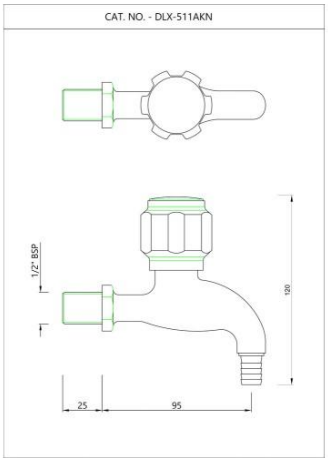

Delux



DLX-CHR-512KN

Long Body Bib Cock

Price: 2150.00 INR

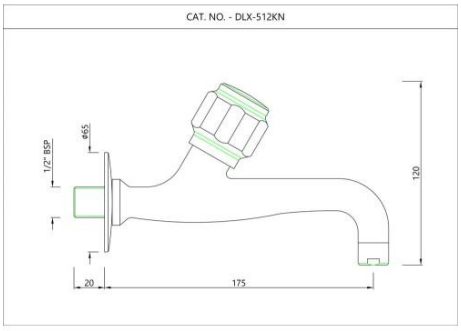



DLX-CHR-512AKN

Two Way Long Body Bib Cock

Price: 2300.00 INR

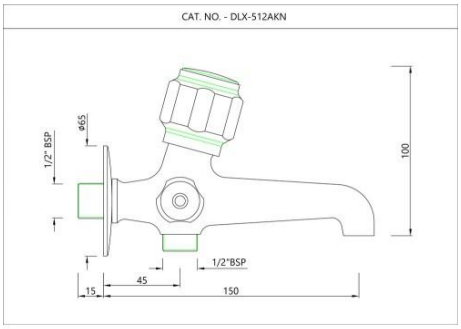



DLX-CHR-512ANKN

Two Way Bib Cock

Price: 2150.00 INR

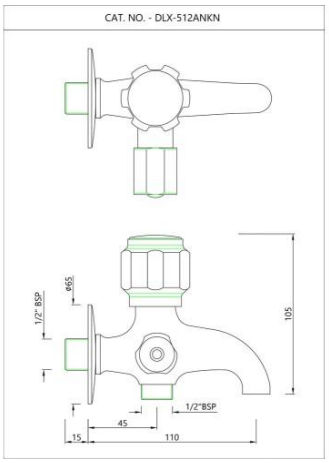

Delux



DLX-CHR-513BKN

Stop Cock, Female End

Price: 1275.00 INR

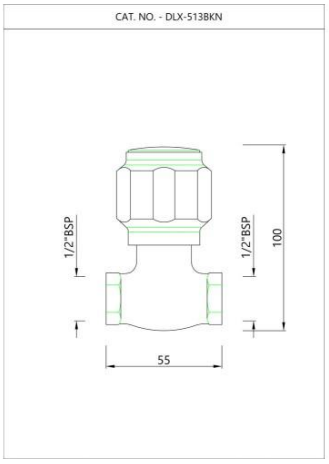



DLX-CHR-526NKN

Basin Inlet Connection

Price: 1100.00 INR

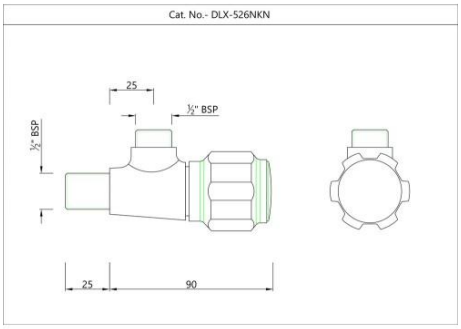



DLX-CHR-526AFKN

2-Way Angle Valve

Price: 1975.00 INR

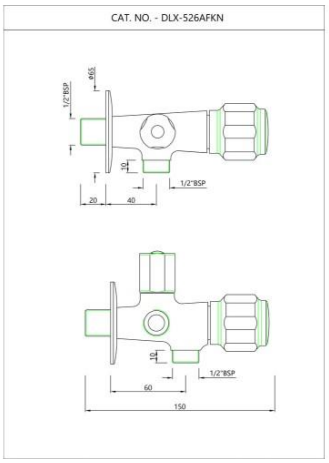



DLX-CHR-514AFTK

Exposed part kit of Concealed Stop Cock

Price: 625.00 INR

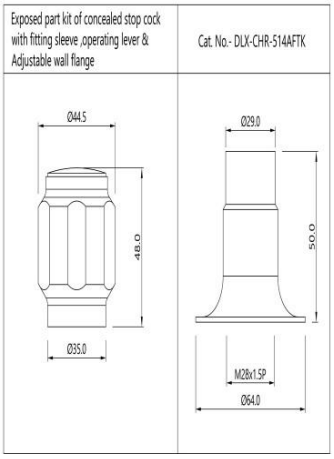



DLX-CHR-514EFTK

Exposed part kit of Concealed Stop Cock

Price: 600.00 INR

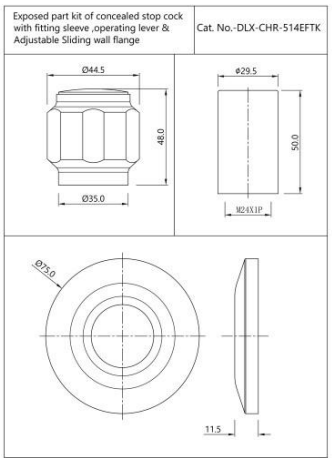



DLX-CHR-526AKN

2-Way Angle Valve

Price: 1925.00 INR

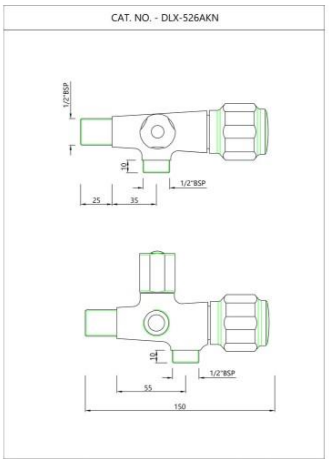

Delux



DLX-CHR-551

Flush Cock

Price: 3350.00 INR

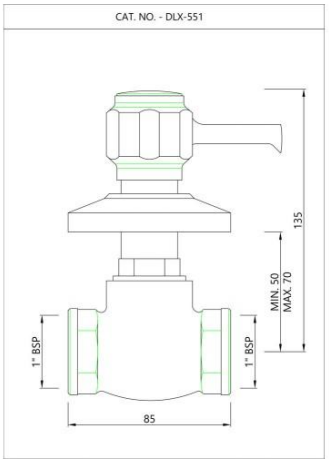



DLX-CHR-553

Flush Cock

Price: 3000.00 INR

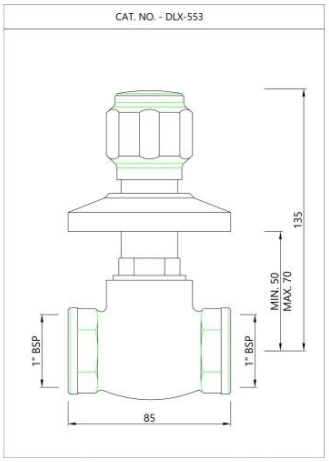

Disclaimer

- Jaquar reserves the right at its sole discretion, to change/modify/alter any product specification at any time without notice, where improvement can be effected in design, development and dimensions.
- Although the information shown in this catalogue is updated to the extent possible but the same may vary. It is advisable to consult our local representative or check in a period manner for latest technical and other updates.
- The prices are subject to change without notice and those ruling at the time of supply will be charged.
- Colours &sizes of product images shown in the Website may vary in reality