ESSCO BY Jaquar GROUP

ORBIT

?????

ORB-CHR-105219

????? ??????? ??-????????? ???????

Price: 4600.00 INR

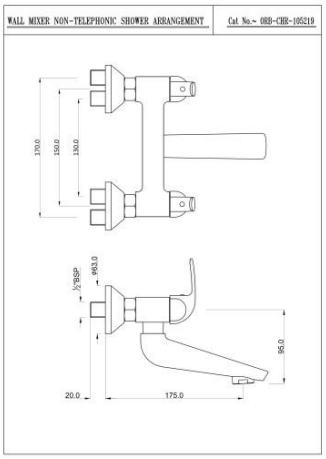

ORB-CHR-105011B

??????? ????? ????? ???????

Price: 3850.00 INR

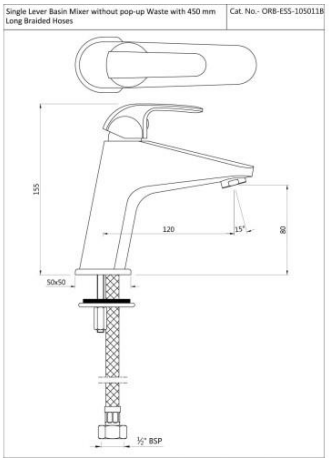

ORB-CHR-105051B

??????? ????? ????? ??????? ??? ???

Price: 4750.00 INR

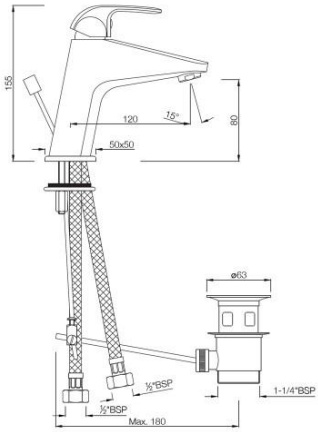

?????

ORB-CHR-105005B

??????? ????? ?? ??

Price: 5250.00 INR

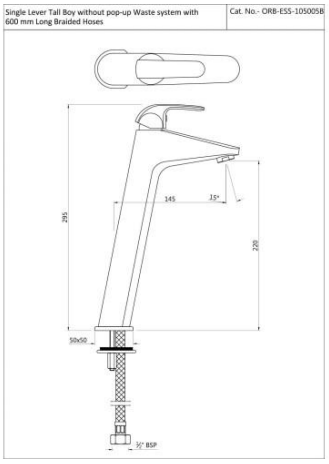

ORB-CHR-105055K

???????? ?????? ??? ?? ??????? ????

Price: 650.00 INR

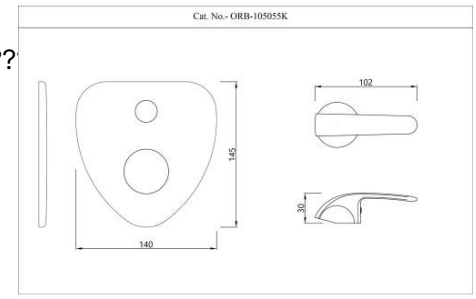

ORB-CHR-105233K

Exposed Part Kit of Single Lever Basin Mixer Wall Mounted

Price: 1725.00 INR

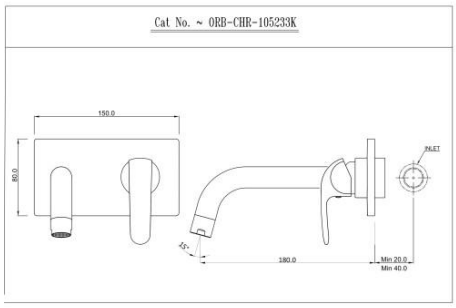

?????

ORB-CHR-105119

??????? ????? ???? ???????

Price: 5900.00 INR

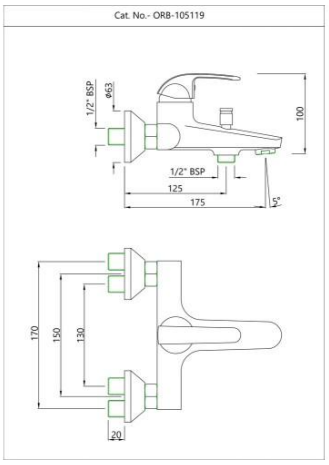

ORB-CHR-105149

??????? ????? ???????? ?????? ?????

Price: 4500.00 INR

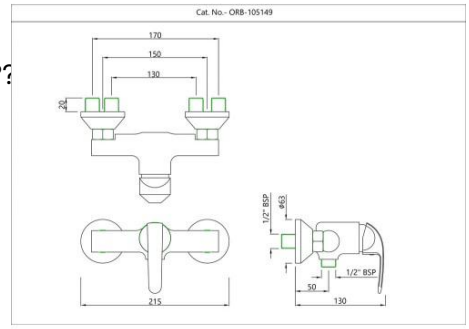

ORB-CHR-105213B

??????? ????? 1-??? ????? ???????

Price: 4750.00 INR

?????

ORB-CHR-105001N

????? ??

Price: 2075.00 INR

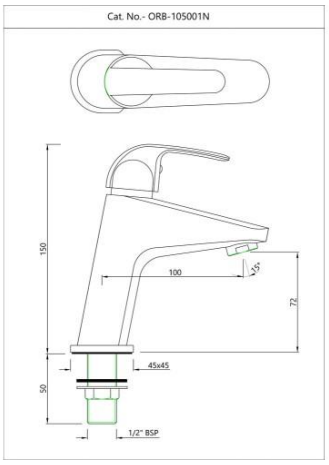

ORB-CHR-105021N

????? ??

Price: 3300.00 INR

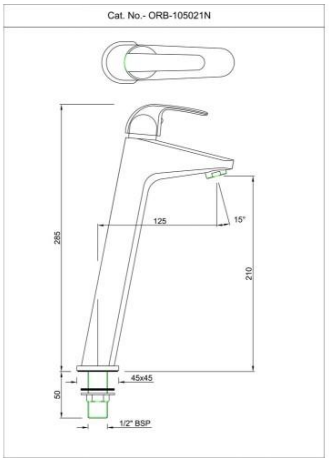

ORB-CHR-105123

????? ??? ?????

Price: 2550.00 INR

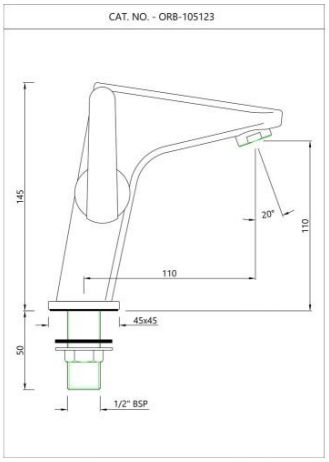

ORB-CHR-105127

????? ??? ?????

Price: 2550.00 INR

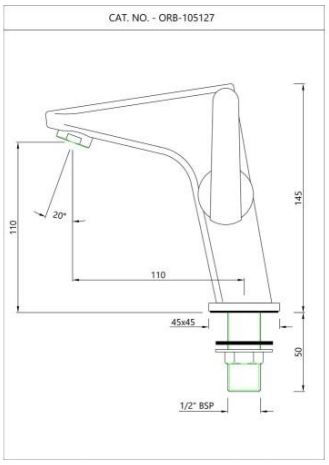

ORB-CHR-105273

???? ???????

Price: 6300.00 INR

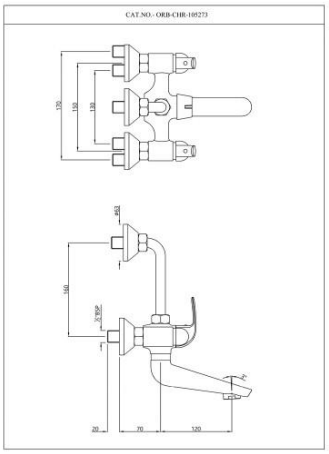

ORB-CHR-105281

???? ??????? 3-??-1 ???????

Price: 6650.00 INR

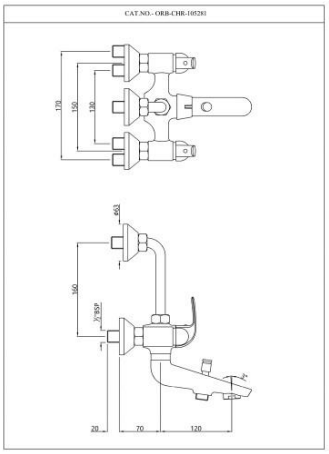

?????

ORB-CHR-105309

????? ??????? ??? ?????????? ??????

Price: 4100.00 INR

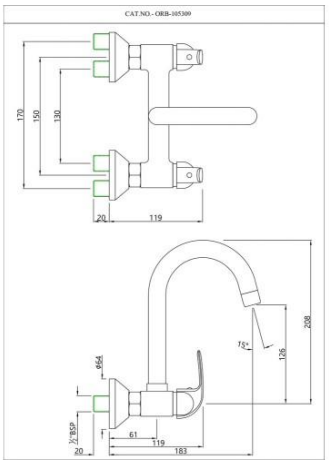

ORB-CHR-105357

Sink Cock with Swinging Spout

Price: 2525.00 INR

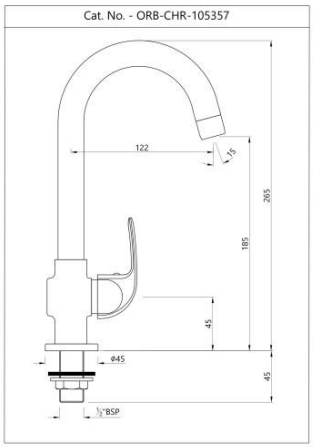

ORB-CHR-105347

????? ?? ??? ?????????? ??????

Price: 2075.00 INR

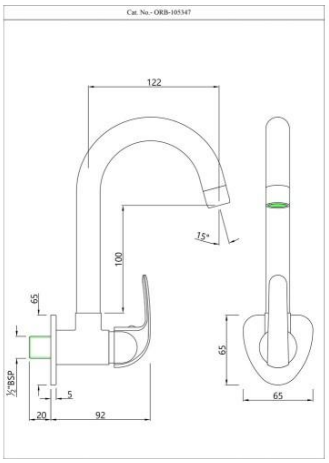

?????

ORB-CHR-105037

??? ??

Price: 1650.00 INR

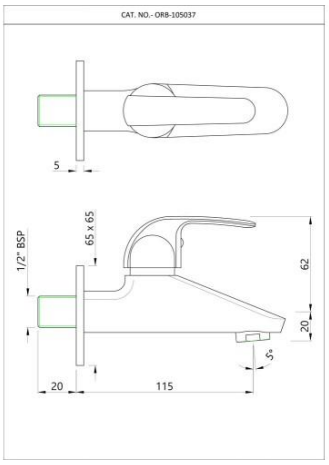

ORB-CHR-105041

2-??? ??? ??

Price: 1825.00 INR

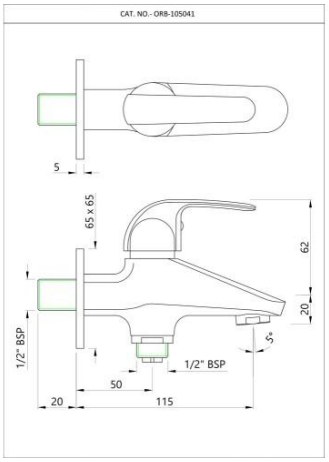

ORB-CHR-105107

?? ??? ??? ??

Price: 1950.00 INR

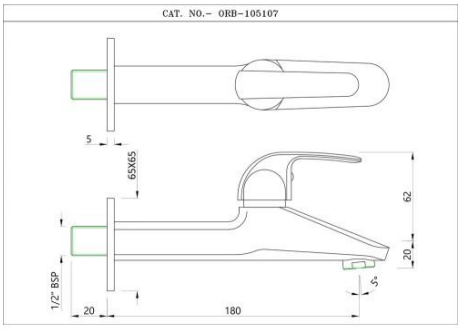

?????

ORB-CHR-105053

??????????? ???? ??

Price: 1050.00 INR

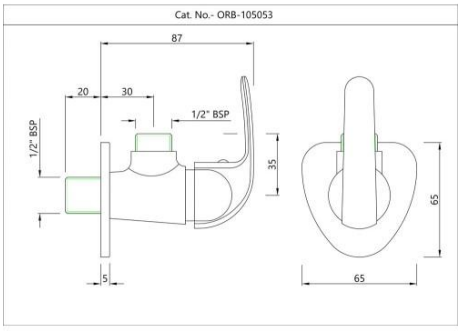

ORB-CHR-105067

2-??? ??????????? ???? ??

Price: 1825.00 INR

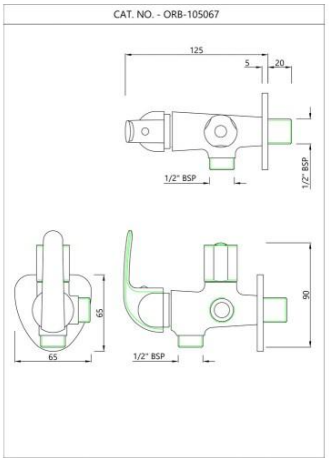

ORB-CHR-105057

??????????? ???? ???

Price: 800.00 INR

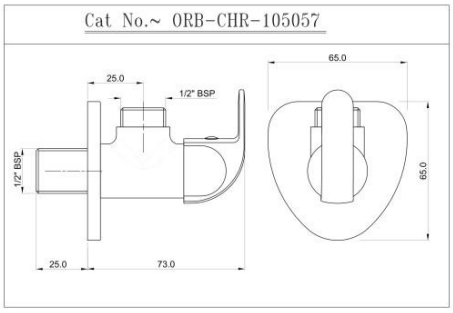

?????

ORB-CHR-105069K

??????? ???? ??

Price: 550.00 INR

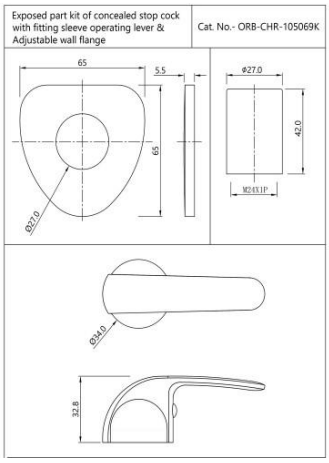

ORB-CHR-105081

????? ??

Price: 2675.00 INR

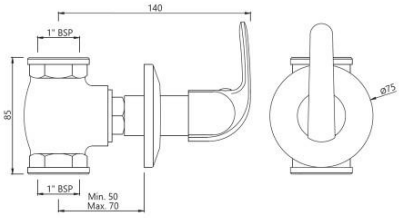

SPE-CHR-105429

????? ??? ??? ??????

Price: 1400.00 INR

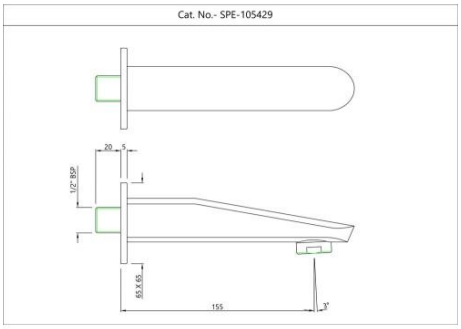

?????

SPE-CHR-105463

????? ??? ??? ??????

Price: 2100.00 INR

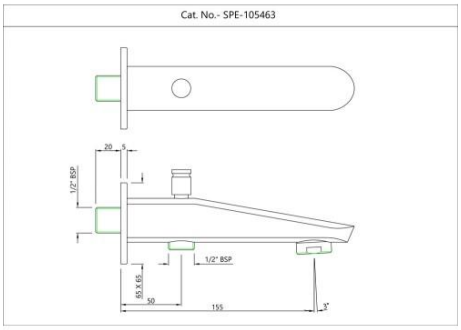

Disclaimer

- Jaquar reserves the right at its sole discretion, to change/modify/alter any product specification at any time without notice, where improvement can be effected in design, development and dimensions.
- Although the information shown in this catalogue is updated to the extent possible but the same may vary. It is advisable to consult our local representative or check in a period manner for latest technical and other updates.
- The prices are subject to change without notice and those ruling at the time of supply will be charged.
- Colours &sizes of product images shown in the Website may vary in reality